250R–105132	REV.:2	10/21/22

REV.	DESCRIPTION	DATE	BY

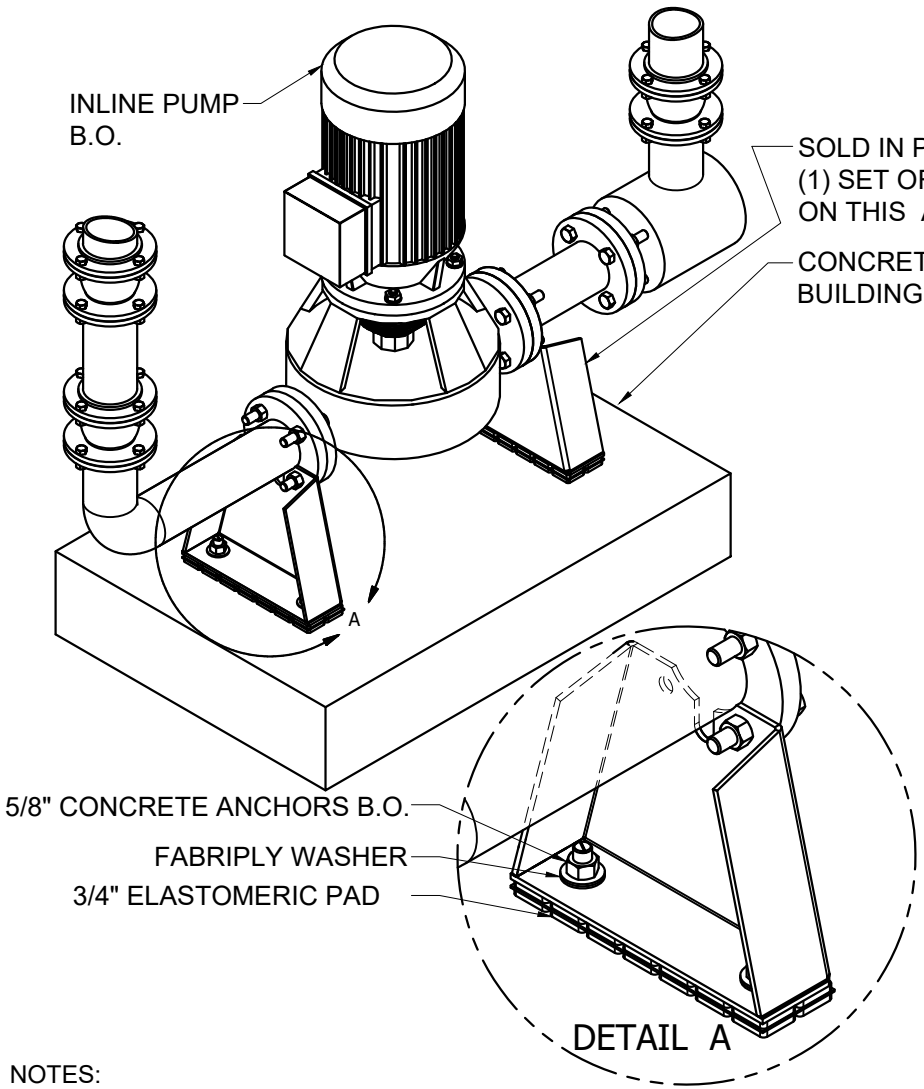

DIM	P/N SUFFIX			
	01-50	02-00	02-50	03-00
BC	3-7/8	4-3/4	5-1/2	6
D	5/8	3/4	3/4	3/4
E	3-1/4	3-1/2	4	4-1/4
OH	12-1/4	12-1/2	13	13-1/4

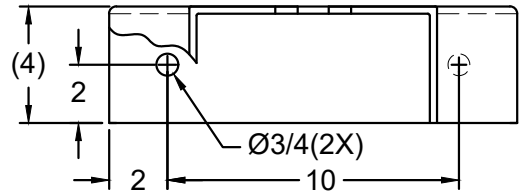

P/N	DESCRIPTION
VILN-01-50	1.5" VERTICAL INLINE PUMP SUPPORT
VILN-02-00	2" VERTICAL INLINE PUMP SUPPORT
VILN-02-50	2.5" VERTICAL INLINE PUMP SUPPORT
VILN-03-00	3" VERTICAL INLINE PUMP SUPPORT

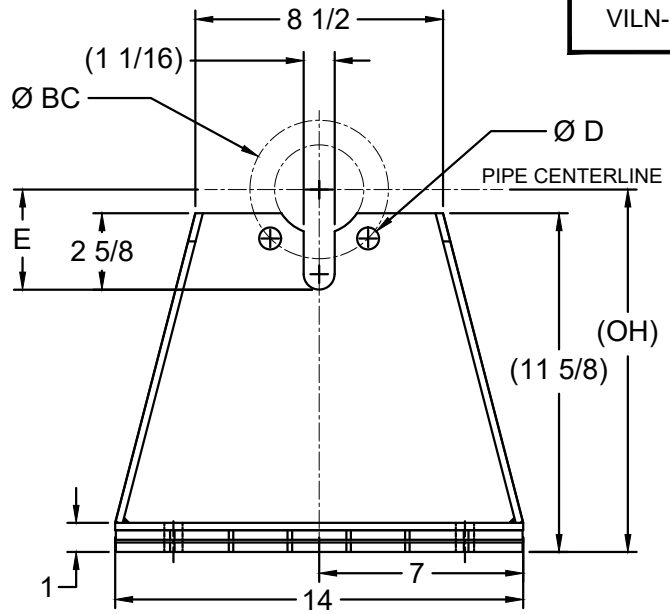

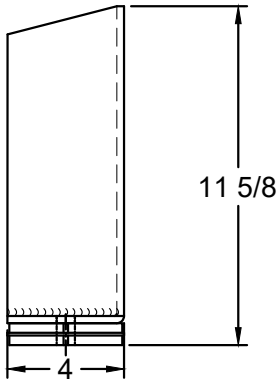

NOTES:
1. ANSI STANDARD CLASS 150 BOLT HOLE PATTERN.
2. SUPPORT CUTOUTS ARE SIZED TO ACCOMMODATE ANSI STANDARD CLASS 150 SLIP-ON FLANGES.
3. FINISH: ONE COAT VMC STANDARD COLOR.

OTHER MATERIALS, COMPOUNDS, OR FINISHES WITH EQUAL OR SUPERIOR PROPERTIES MAY BE SUBSTITUTED AS THEY BECOME AVAILABLE.

CERTIFIED FOR:

JOB NAME: _____

CUSTOMER : _____

CUSTOMER P.O.: _____

SALES ORDER: _____

MODEL VILN-01-50 THRU VILN-03-00
VERTICAL INLINE PUMP SUPPORT
STYLE 1.5" THRU 3"
ISOLATED

VMC GROUP
THE POWER OF TOGETHER
Bloomingdale, NJ 07403
Houston, TX 77041

SCALE : NONE

SHEET: 1 OF 1

Member VISCMA

DRAWING NO.:

REVISION

PROPRIETARY: EXCEPT AS OTHERWISE AGREED IN WRITING, THE INFORMATION AND DESIGN DISCLOSED HEREIN ARE THE PROPERTY OF THE VMC GROUP AND MUST NOT BE COPIED OR DISTRIBUTED OUTSIDE THE VMC GROUP EXCEPT TO AUTHORIZED PERSONS WITH A GENUINE NEED TO KNOW WHO BY THE USE HEREOF ACKNOWLEDGE THE VMC GROUP'S OWNERSHIP AND AGREE TO MAINTAIN THIS INFORMATION AND DESIGN IN STRICT CONFIDENCE.